Meaningful Innovation.

INSTRUCTION MANUAL

PORTABLE POWER STATION

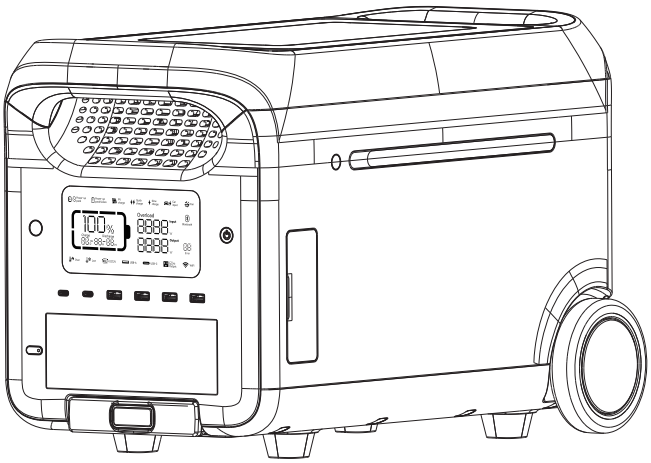

4000
LIFE CYCLE

02 YEAR
WARRANTY*

Smart Life App

MODEL	VT-300011
SKU	12709

Expansion Port

INTRODUCTION

Thank you for selecting and buying V-TAC Product. V-TAC will serve you the best. Please read these instructions carefully & keep this user manual handy for future reference. If you have any another query, please contact our dealer or local vendor from whom you have purchased the product. They are trained and ready to serve you at the best.

Caution, risk of electric shock.

This marking indicates that this product should not be disposed of with other household wastes.

MULTI-LANGUAGE MANUAL QR CODE
Please scan the QR code to access the manual in multiple languages.

PACKAGE CONTAINS

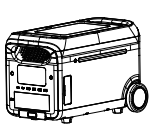
Power station

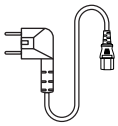
AC cable

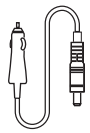
Car charge cable

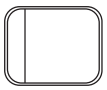
Anti-slip gloves

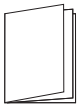
User manual

FR
Les piles et batteries se recyclent
À DÉPOSER EN MAGASIN
OU
À DÉPOSER EN DÉCHÈTERIE
Points de collecte sur www.quefairedemesdechets.fr

IN CASE OF ANY QUERY/ISSUE WITH THE PRODUCT, PLEASE REACH OUT TO US AT: SUPPORT@V-TAC.EU
FOR MORE PRODUCTS RANGE, INQUIRY PLEASE CONTACT OUR DISTRIBUTOR OR NEAREST DEALERS.
V-TAC EUROPE LTD. BULGARIA, PLOVDIV 4000, BUL.L.KARAVELOW 9B

TECHNICAL DATA

NET WEIGHT	≈34kg (≈75lbs)
DIMENSION	536*303*343mm (21*12*13.5in)
BATTERY CAPACITY	2560Wh, 51.2V⎓, 24Ah
WI-FI	Supported

OUTPUT SPECIFICATIONS

EU/FR/AU/ZA

AC SOCKET X3 (INVERTER MODE)	Pure sine-wave, total 3000W (peak 5000W), 220-240V~, 50Hz/60Hz, 16A
AC SOCKET (BYPASS MODE)	220-240V~, 50Hz/60Hz, 2300W Max., 10A Max.

UK

AC SOCKET X3 (INVERTER MODE)	Pure sine-wave, total 3000W (peak 5000W), 220-240V~, 50Hz/60Hz, 13A
AC SOCKET (BYPASS MODE)	220-240V~, 50Hz/60Hz, 2300W Max., 10A Max.

US

AC SOCKET X4 (INVERTER MODE)	Pure sine-wave, total 3000W (peak 5000W) • AC output (x3): 100-120V~, 60Hz, 20A, 2400W • AC output (x1): 100-120V~, 60Hz, 25A, 3000W
AC SOCKET (BYPASS MODE)	100-120V~, 60Hz, 1800W Max., 15A Max.

USB-A1/A2	5V⎓ 3A, 9V⎓2A, 12V⎓1.5A, 18W Max.
USB-A3/A4	5V⎓2.4A, 12W MAX.
USB-C1/C2	5/9/12/15V⎓3A, 20V⎓5A, 100W MAX.
ANDERSON TERMINAL OUTPUT	12.6V⎓30A MAX., 378W MAX.
CAR CHARGER	12.6V⎓10A, 126W MAX.
DC5521 OUTPUT X2	12.6V⎓3A

- Car charge and DC5521 share power, 126W Max.
- Inverter mode: the output AC power comes from the battery, not the grid.
- Bypass mode: the output AC power comes from the grid, not the battery.

INPUT SPECIFICATIONS

UK/EU/FR/AU/ZA

• AC INPUT POWER	2300W Max., 10A
• AC INPUT VOLTAGE	220-240V~, 50Hz/60Hz

US

• AC INPUT POWER	1800W Max., 15A
• AC INPUT VOLTAGE	100-120V~, 60Hz

PV & CAR CHARGING

• PV CHARGE X2	800W Max., 13-45V ⎓ 12A
• CAR CHARGING INPUT	12V/24V battery supported, 8A by default

INPUT CHARGING POWER

UK/EU/FR/AU/ZA

- AC CHARGING POWER 2100W Max.

US

- PV / CAR CHARGING POWER 1800W Max.

- AC/PV CHARGING POWERX2 800W Max.
- AC+PV CHARGING POWER 2688W Max.

BATTERY SPECIFICATIONS

- CELL TYPE Lithium iron phosphate battery ($LiFePO_4$)
- LIFE CYCLE 4000 cycles
- PROTECTION TYPE over temperature protection, low temperature protection, over discharge protection, over charge protection, over load protection, short circuit protection, over current protection

*Test conditions: 95% DOD, 0.5C charge & 1.0C discharge at +25±3°C.

OPERATING TEMPERATUR

- OPTIMAL OPERATING TEMPERATURE 20°C~30°C (68°F~86°F)
- DISCHARGE TEMPERATURE RANGE -20°C~45°C (-4°F~113°F)
- CHARGE TEMPERATURE RANGE 0°C~45°C (32°F~113°F)
- STORAGE AMBIENT TEMPERATURE -20°C~45°C (20°C~30°C PREFERRED) [-4°F~113°F(68°F~86°F PREFERRED)]

*Whether the product can be charged or discharged is subject to the actual battery pack temperature.

BATTERY EXPANSION

- POWER INPUT/OUTPUT 40-58.8V ⎓ 50A charge (Max.), 70A discharge (Max.)
- NOMINAL ENERGY 2560Wh, support 6 expansion battery packs at most, separate selling.

NOTE

- This device requires Wi-Fi Frequency 2.4GHz
- Operating frequency (maximum transmitted power) 2.412-2.484Ghz

WARNING SYMBOLS USED

This is the safety alert symbol. This symbol alerts you to potential hazards that could result in property damage and/or serious bodily harm or death.

SAFETY GUIDELINES

WARNING

1. Do not let a working power station be close to the heat source, such as fire or heater.
2. Do not make power station contact with any liquid.
3. Do not use power station in a strong electrostatic or strong magnetic field environment.
4. Do not disassemble power station in any way or pierce it with a sharp object.
5. Do not short power station by wire or other metal objects.
6. It is forbidden to step on, sit or climb on this product.
7. Do not use ingenuine parts or accessories. For part or accessory replacement, please visit official sales channel for purchase information.
8. When using power station, please follow the operating temperature defined in this user manual strictly. If the temperature is too high, battery may catch fire or even explode. If the temperature is too low, power station performance will be seriously impaired, even normal use will be impacted.
9. Do not stack heavy objects on power station.
10. Do not stop the fan by force or expose power station in an unventilated or dusty environment when it is working.
11. Please avoid collision, drop, and violent vibration. If severe impact happens, shut down the power supply immediately. Please fix power station firmly during transportation to avoid vibration and impact.
12. If power station falls into water accidentally, place it in a safe and wide area, and keep yourself away from it until it's dry. Dried product shall not be used again. Dispose it properly according to chapter 2.2 in this user manual. If power station is on fire, please use fire extinguishing equipment in the recommended order: water or water mist, sand, fire blanket, dry powder, dioxide carbon fire extinguisher.
13. If there is dirt, use a dry cloth to wipe it.
14. Place power station carefully to prevent damage. If power station is tipped over and seriously damaged, turn off power station immediately and place the battery in a spacious place and keep it away from flammable materials and people, and scrap it in accordance with the requirements of local laws and regulations.
15. Keep power station out of the reach of children and pets.
16. Keep power station in a dry and ventilated place.
17. In humid environment (seaside, water, etc.), it is recommended to equip power station with moisture-proof bag. If water is found inside product, do not use/start it again. Please take countermeasures to prevent electric shock before touching power station. Put it in a safe and waterproof open area, and contact customer service immediately.
18. It is not recommended to use power station to supply power for safety-related emergency medical equipment, including but not limited to medical grade breathing machine (hospital version CPAP: Continuous Positive Airway Pressure), artificial lung (ECMO, Extracorporeal Membrane Oxygenation). It can be used to supply power for home version CPAP at home and does not require continuous professional monitoring. Please follow your doctor's advice and consult the manufacturer for any restrictions on the use of the device. For general medical equipment, please pay attention to the power condition to ensure that power does not run out.
19. Power supplies will inevitably generate electromagnetic fields when it is in use, which might affect the implantable medical device or normal operation of personal medical device, such as pacemaker devices, cochlear implants, hearing AIDS, defibrillators, etc. If any of these medical devices are used, please consult the manufacturer about the restrictions on the use to ensure that power station is operated at a safe distance from implanted medical devices such as pacemakers, cochlear implants, hearing AIDS, defibrillators, etc.
20. When the power station is connected to a refrigerator, it may automatically shut down because of the power fluctuation property of the refrigerator. When connecting the power supply to a refrigerator that stores medicine, vaccines or other valuable items, it is recommended to set the AC output to "Never off" in the APP, so as to ensure continuous power. Users should pay attention to power consumption.
21. During the push-pull movement of this product, it is forbidden to put other items on this product.

DISCARD

- Conditions permitting, be sure to discharge the battery completely, and then put power station in the specified battery recycling bin. Power station contains batteries, which are dangerous. It is strictly prohibited to discard them in ordinary dust bins. For details, follow local laws and regulations on battery recycling and disposal.
- If the battery cannot be discharged completely due to product failure, do not discard the battery directly in the battery recycling bin. Contact a professional battery recycling company for further disposal.
- The battery will not start after over discharge. Please dispose it as discarded.

PRODUCT OVERVIEW

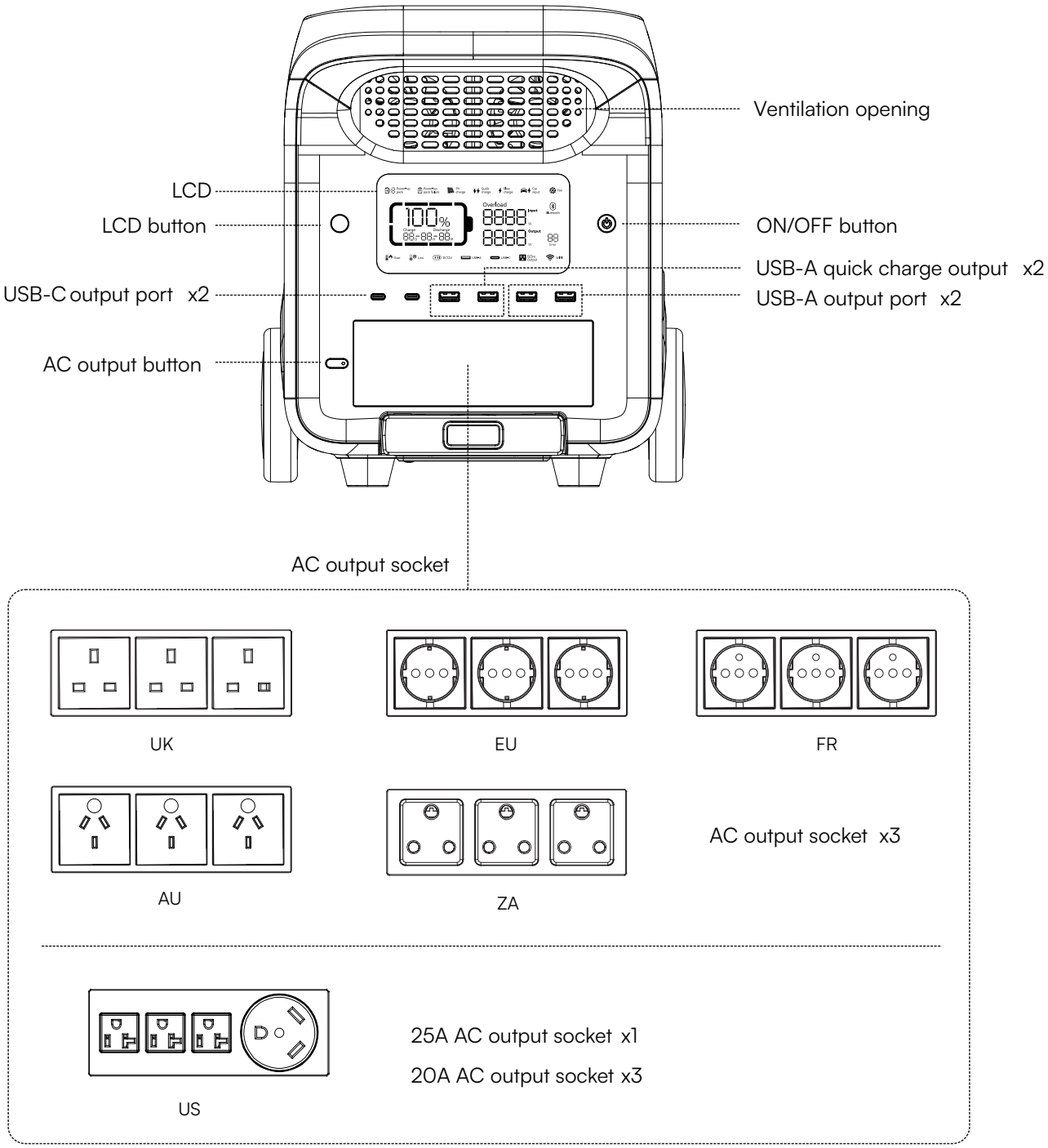

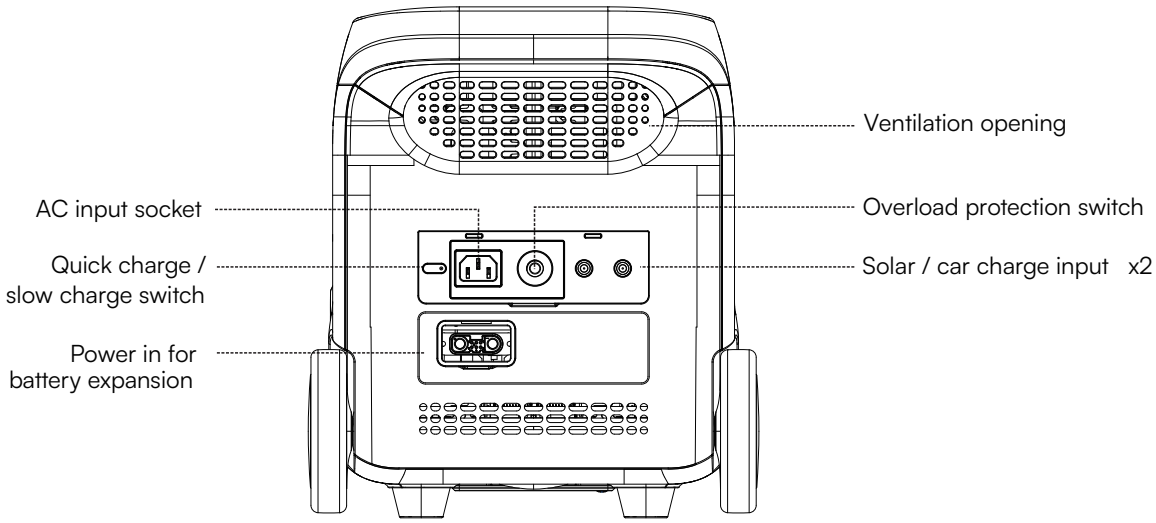

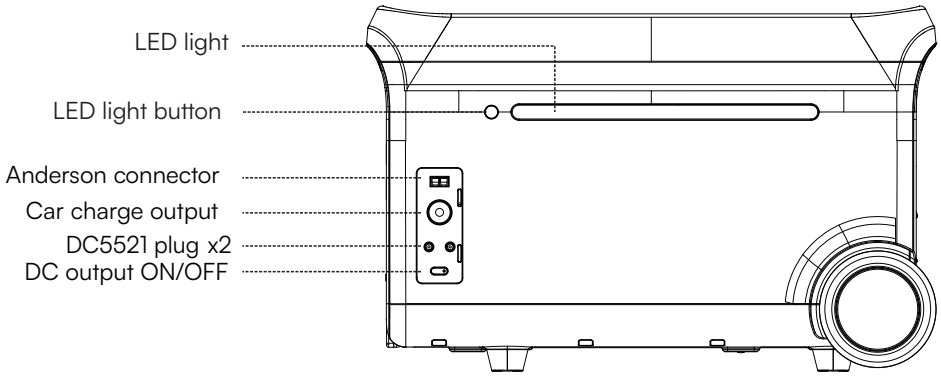

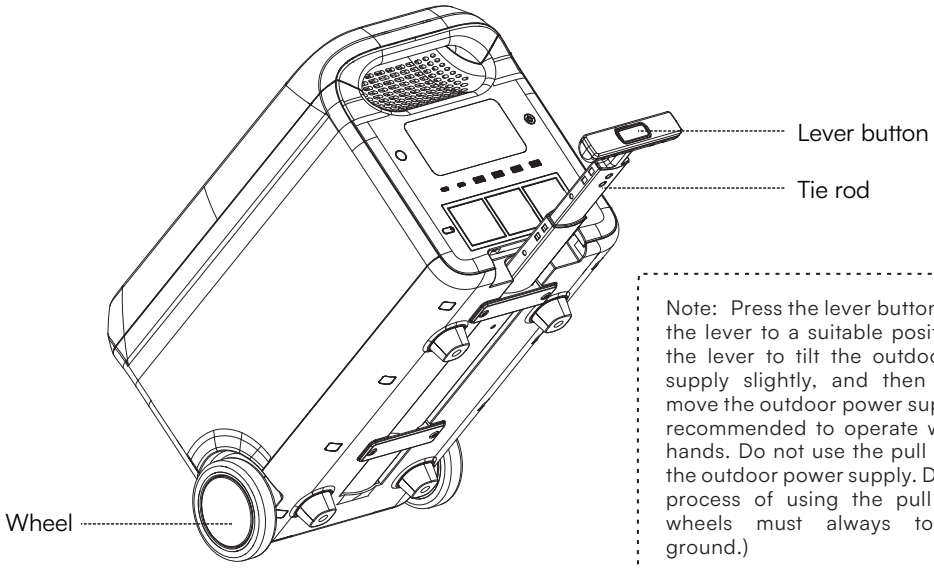

Note: Press the lever button, pull out the lever to a suitable position, pull the lever to tilt the outdoor power supply slightly, and then you can move the outdoor power supply. (It is recommended to operate with both hands. Do not use the pull rod to lift the outdoor power supply. During the process of using the pull rod, the wheels must always touch the ground.)

LCD SCREEN

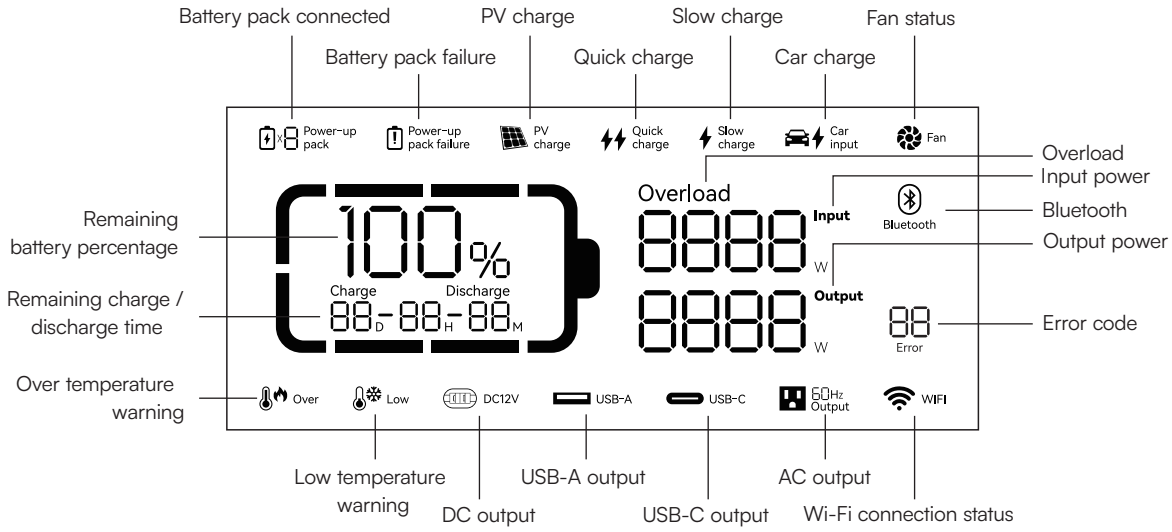

BATTERY CAPACITY

- When power station is being charged, SOC icon will flicker.

WI-FI CONNECTION STATUS

- When Wi-Fi is reset, the Wi-Fi icon flashes for 3 seconds.
- The icon lights up when Wi-Fi is connected.
- The icon turns off when Wi-Fi is disconnected

BLUETOOTH CONNECTION STATUS

- The Bluetooth icon lights up when the product is wirelessly paired.
- It remains lit when the Bluetooth link is successful.
- The icon turns off when Bluetooth is disconnected

OPERATING INSTRUCTIONS

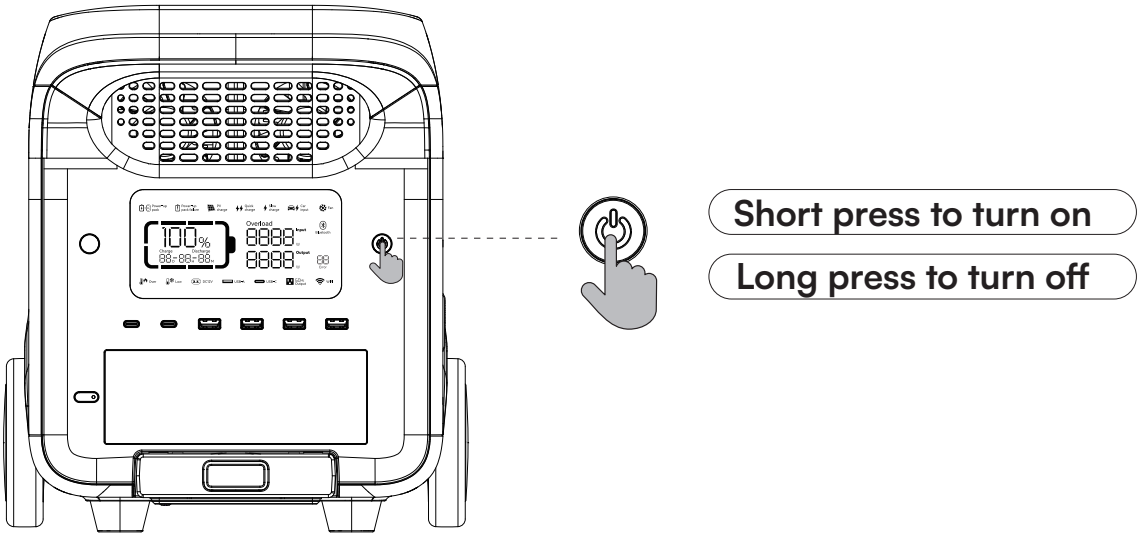

Note: Long press the ON/OFF button to turn off the machine and clear the fault information.

- Press the main power switch to turn on the device. The screen and main power indicator light will illuminate.
- If the device remains idle for 5 minutes, the LCD display will automatically turn off. It will light up again when plugged in or unplugged from mains, PV, car charger, or upon key operation. To manually toggle the LCD display, press the main power switch.
- Press and hold the main power switch to turn off the power station.
- In normal mode (battery above 5%):
- Default standby time is 2 hours.
- If AC output is off and there's no charge/discharge activity for 2 hours, the unit will automatically shut down.
- Standby time can be adjusted via the APP.
- If battery is at 5% or below, the unit enters low power mode and adjusts standby time based on battery level before auto shutdown.
- In normal mode, long press the LED light button to exit automatic shutdown setting. The battery icon ( ) will flash.
- Long press again to enter automatic shutdown setting. The battery icon ( ) will not flash.

(This setting protects battery life. Exiting it may reduce battery longevity—use with caution.)

AC OUTPUT INSTRUCTIONS

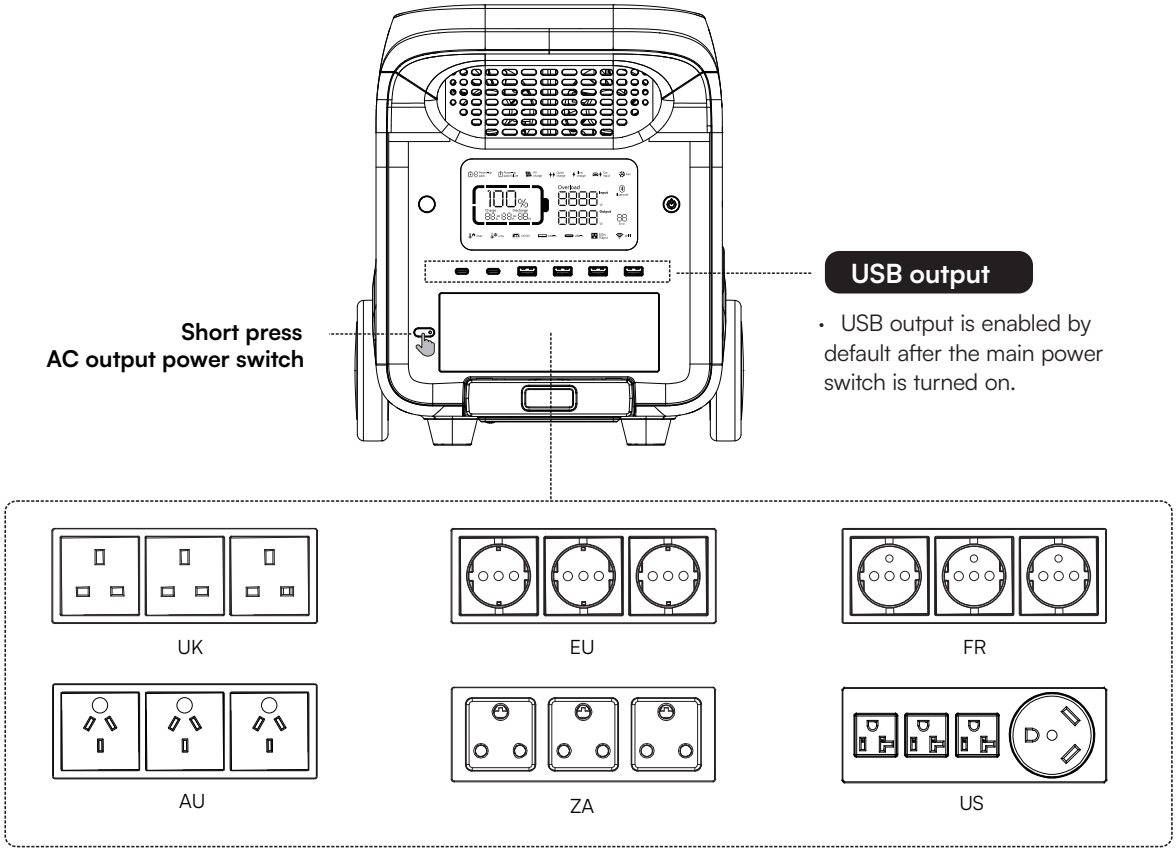

Note: When no AC input, long press the above AC output button, you can switch the AC off-grid output frequency (50Hz Output / 60Hz Output), long press 2s to switch, the AC output icon will flash 3 times after successful switching.

- After ensuring the main power is turned on, short press the AC output power switch to turn on AC output.
- Short press again to turn it off.
- The default standby time for the AC output port is 1 hour.
- If no load is detected for 1 hour, AC output will automatically turn off.
- In normal mode, long press the LED light button to exit automatic shutdown setting.
- The battery icon ( ) on the screen will flash.
- Long press again to enter automatic shutdown setting.
- The battery icon ( ) will not flash.
- Long pressing the LED light button to exit automatic shutdown is recommended for AC equipment below 10W and pulse working equipment.
- When AC output is not in use, turn it off to save power

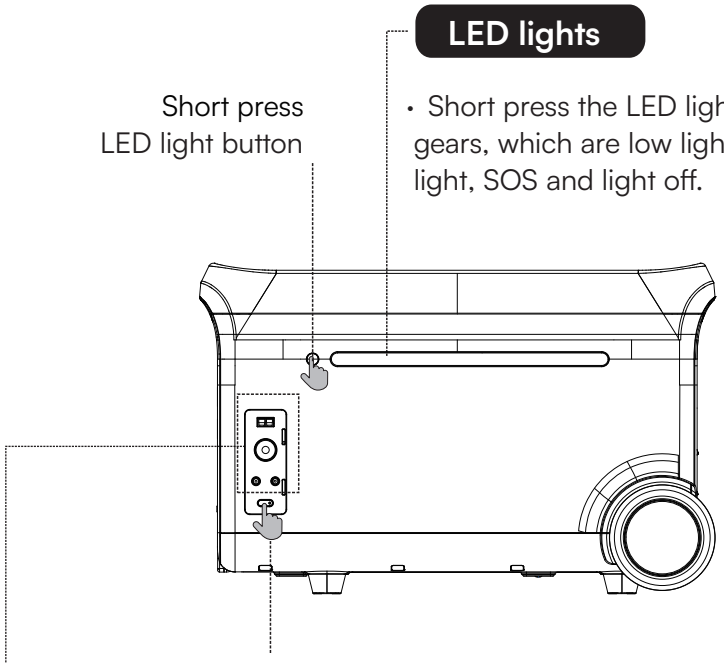

12V DC output

- After the main power switch is turned on, press the 12V DC output power switch to enable the DC output port.
- Press the 12V DC output power switch again to turn it off.

AC CHARGING

Quick charging technology is designed for AC charging. You can control the charging power via the AC charging speed switch. The slow charge mode is on by default when power station is turned on, and can be switched to quick charge mode by the button. Quick and slow charging mode switching can also be set by APP. If the current is continuously higher than 20A, the charging input port will start the self-protection function, and the charging overload protection switch will automatically trip. Press the charge overload protection switch to restore charging after confirming no fault.

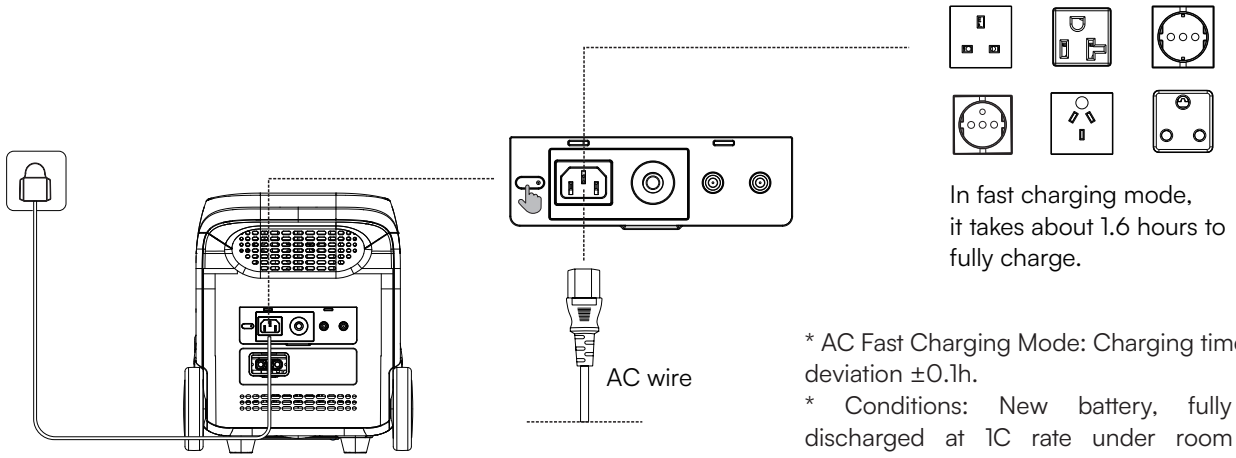

In fast charging mode, it takes about 1.6 hours to fully charge.

* AC Fast Charging Mode: Charging time deviation ±0.1h.
* Conditions: New battery, fully discharged at 1C rate under room temperature, then rested for 2 hours at room temperature before performing AC fast charging at room temperature.

QUICK CHARGE FUNCTIONALITY

The device supports both quick charge and slow charge modes, which can be toggled using the dedicated button.

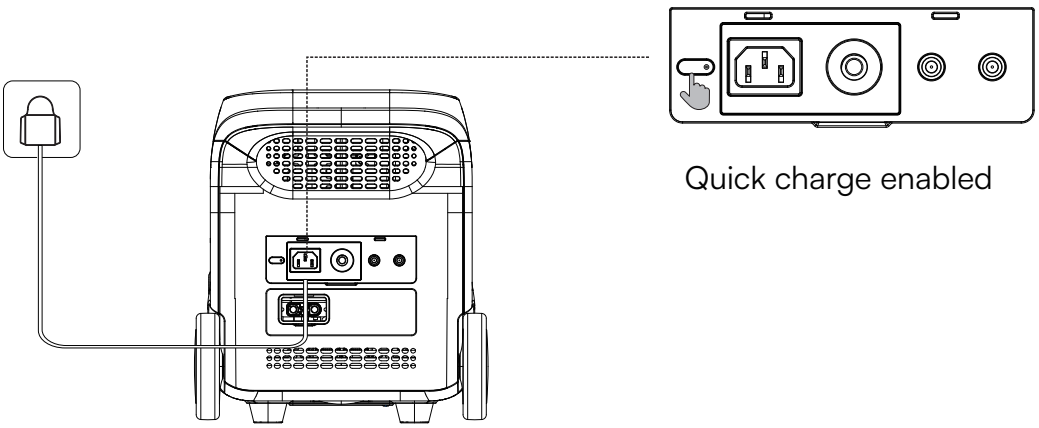

Quick charge enabled

The charging power range can be adjusted by APP.

Please use the standard AC charging Cable for fast charging. AC Charging Cable should directly plug into 10A (or above) wall-mounted socket. We take no responsibilities for any damage caused by using unofficial AC charging cable, and other failures to follow instructions.

Note: When charging through US Specification Power station AC, please use the official standard AC charging cable for charging, the AC charging cable plug needs to be directly connected to the wall plug that supports more than 15A current, the company does not assume any responsibility for the damage caused by the use of other unofficial charging cables and failure to operate according to specifications.

PV CHARGING

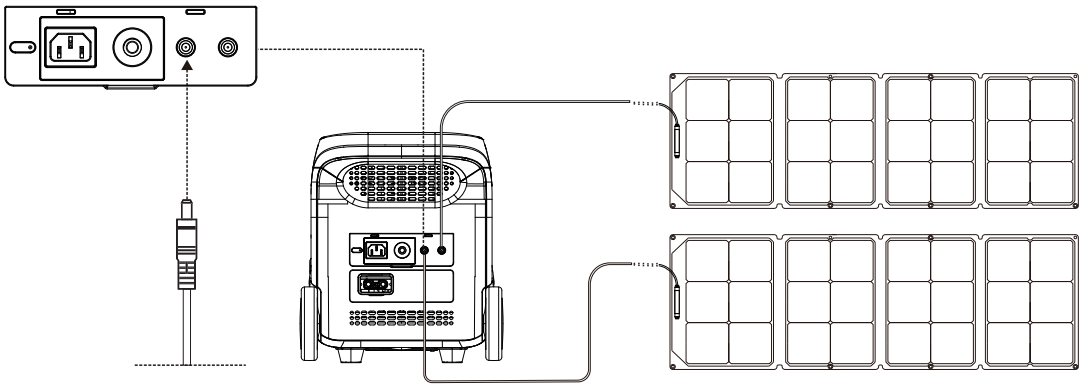

Users can use solar panels to charge power station as shown in the picture.

Dual solar panels supported.

SOLAR CHARGING CABLE (DC7909)

- Please follow the user manual to connect the solar panels.
- Before connecting the solar panel, check whether its output voltage is within power station specifications to avoid damage to power station.

*The interface of this product is DC7909. If you need an adapter cable from MC4 to DC7909, please purchase it yourself.

CAR CHARGING

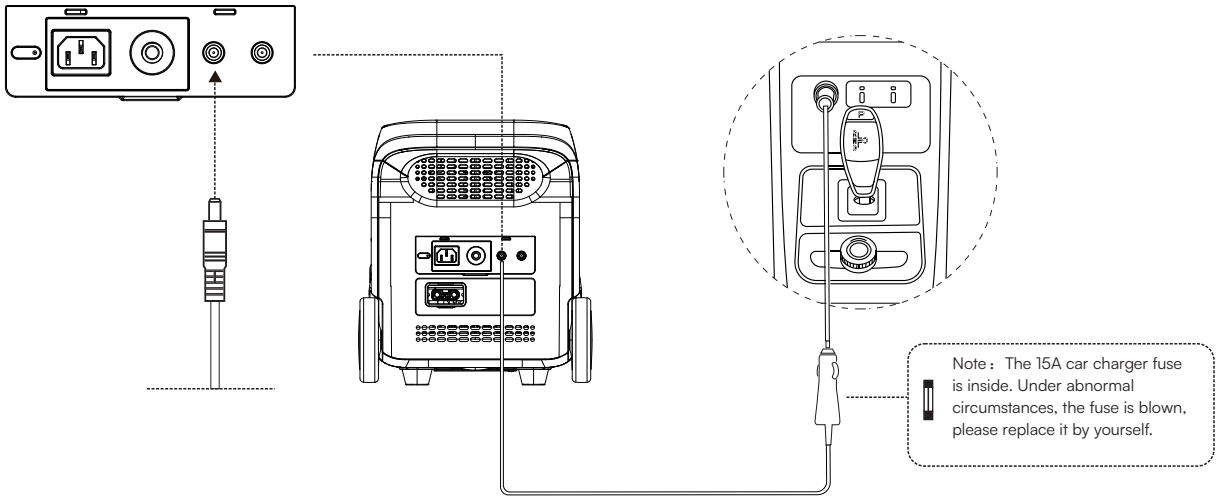

CAR CHARGER CABLE (DC7909)

Power station can be charged by a car charging port. It should be charged after the car starts, so as to avoid the car battery loss and failure to start. At the same time, ensure good connection between the car charging port and cigarette lighter. We take no responsibilities for any loss caused by improper operation.

BATTERY EXPANSION

The power station supports connection with up to six expansion battery packs simultaneously for increased capacity.

Notes:

1. Before connecting the battery pack, please make sure both the power station and battery pack are turned off.
2. After the battery pack is connected, check if the battery icon is shown in the displays of both the power station and the battery pack.
3. While charging, please do not connect or remove the battery pack. If connection or removal is necessary, turn off the power station prior to operation.
4. Please do not touch the metal terminals. If there is foreign matter on the metal terminals, clean it with a dry cloth gently and carefully.

PARALLEL MODE OF 1 POWER STATION AND 1 EXPANSION BATTERY PACK

1. Turn off the power station and expansion battery pack.
2. Plug one end of the cable to expansion port of power station, the other end to Power Output of battery pack.
3. After parallelization, press power button ⏻ of power station to enable the power station and battery pack to show current capacity. The power station shows the paralleled quantity, and capacity is expanded.
4. After parallelization, connect ports of the power station for charging or discharging.

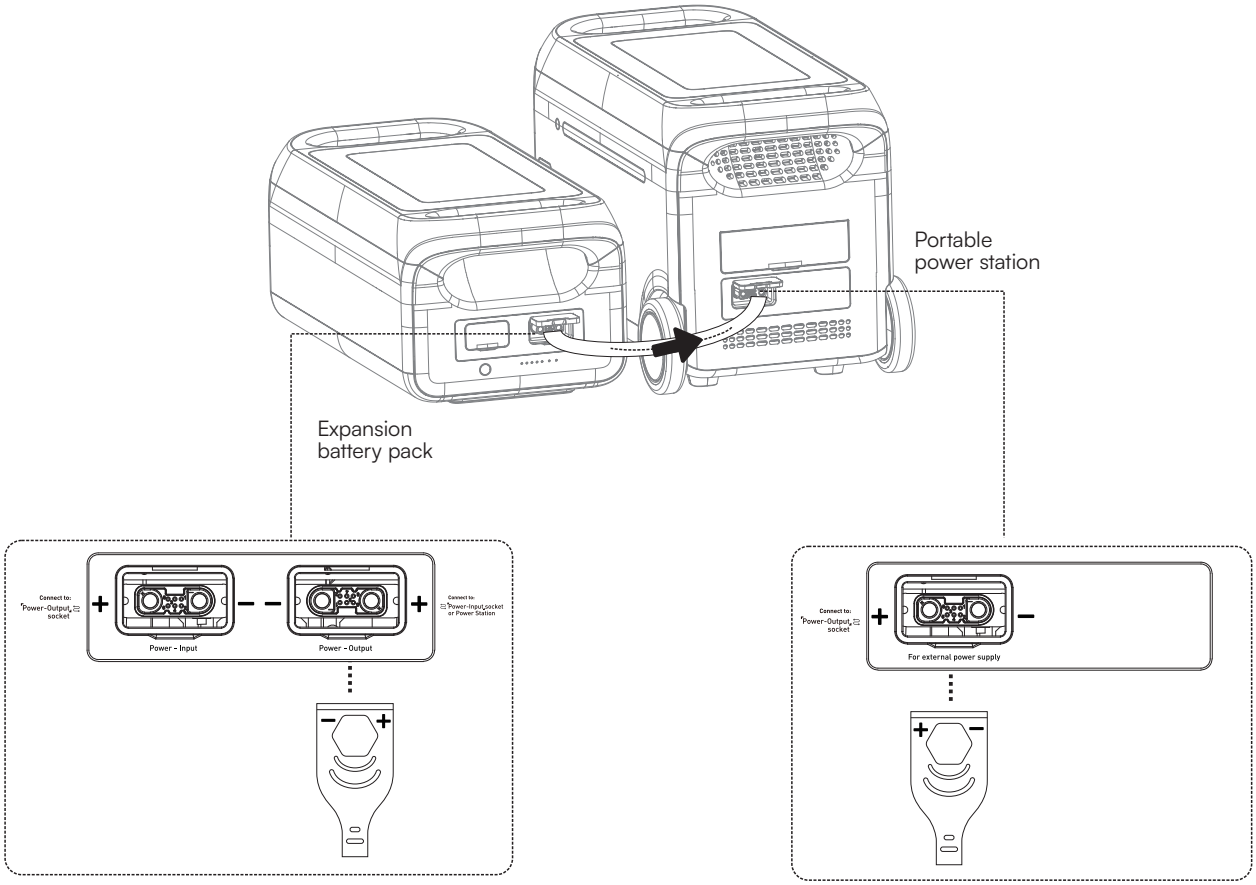

Remark: There are + and – symbols on battery packs and cables in case of reverse polarities.

PARALLEL MODE OF 1 POWER STATION AND MULTIPLE EXPANSION BATTERY PACKS

1. Turn off the power station and expansion battery packs.
2. Plug one end of cable #1 to expansion port of power station, the other end to Power Output of battery pack #1. Plug one end of cable #2 to Power Input of battery pack #1, the other end to Power Output of battery pack #2. Plug one end of cable #3 to Power Input of battery pack #2, the other end to Power Output of battery pack #3. 6 battery packs can be parallelized at most.
3. After parallelization, press power button ⏻ of the power station to enable the power station and battery packs to show current capacity. The power station shows the paralleled quantity, and capacity is expanded.
4. After parallelization, connect ports of the power station for charging or discharging.

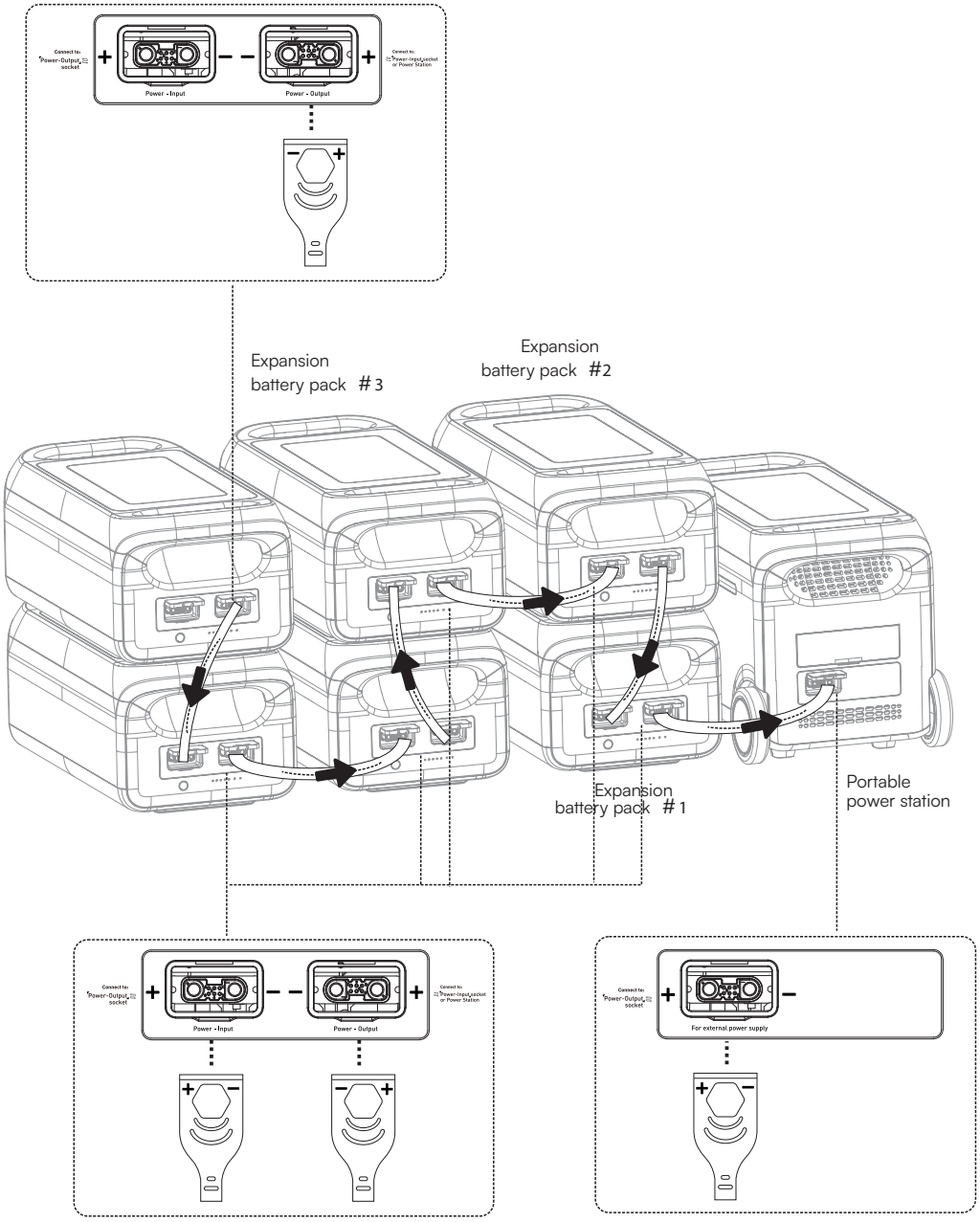

Remark: There are + and – symbols on battery packs and cables in case of reverse polarities.

APP INSTRUCTIONS

You can control and view information and data about this product via the App.

To download the software:

- Search for [Smart Life] in the Google App Store or Apple App Store
- Download, register, and open the app
- Or scan the QR code provided to download directly

For detailed usage of the app, please refer to the APP Operation Guide.

UPS FUNCTION

This product supports the UPS (Uninterruptible Power Supply) function. When connected to the power grid via the AC charging cable, the appliance can operate through the AC output port of the product. In this state, the system is in bypass mode (AC power is supplied directly from the grid, not the battery).
If the grid power is suddenly lost, the product will automatically switch to battery-powered mode within 14 milliseconds. This is referred to as inverter mode (AC power is supplied from the battery, not the grid). Please note that this function does not support 0-millisecond switching.

Important Usage Guidelines

- Do not connect this product to devices that require highly uninterrupted power supply, such as data servers or workstations, unless compatibility has been confirmed through multiple tests.
- It is recommended to operate only one device at a time. Avoid connecting multiple devices simultaneously to prevent triggering the product's overload protection.
- The manufacturer is not responsible for device malfunction or data loss resulting from failure to follow these instructions.

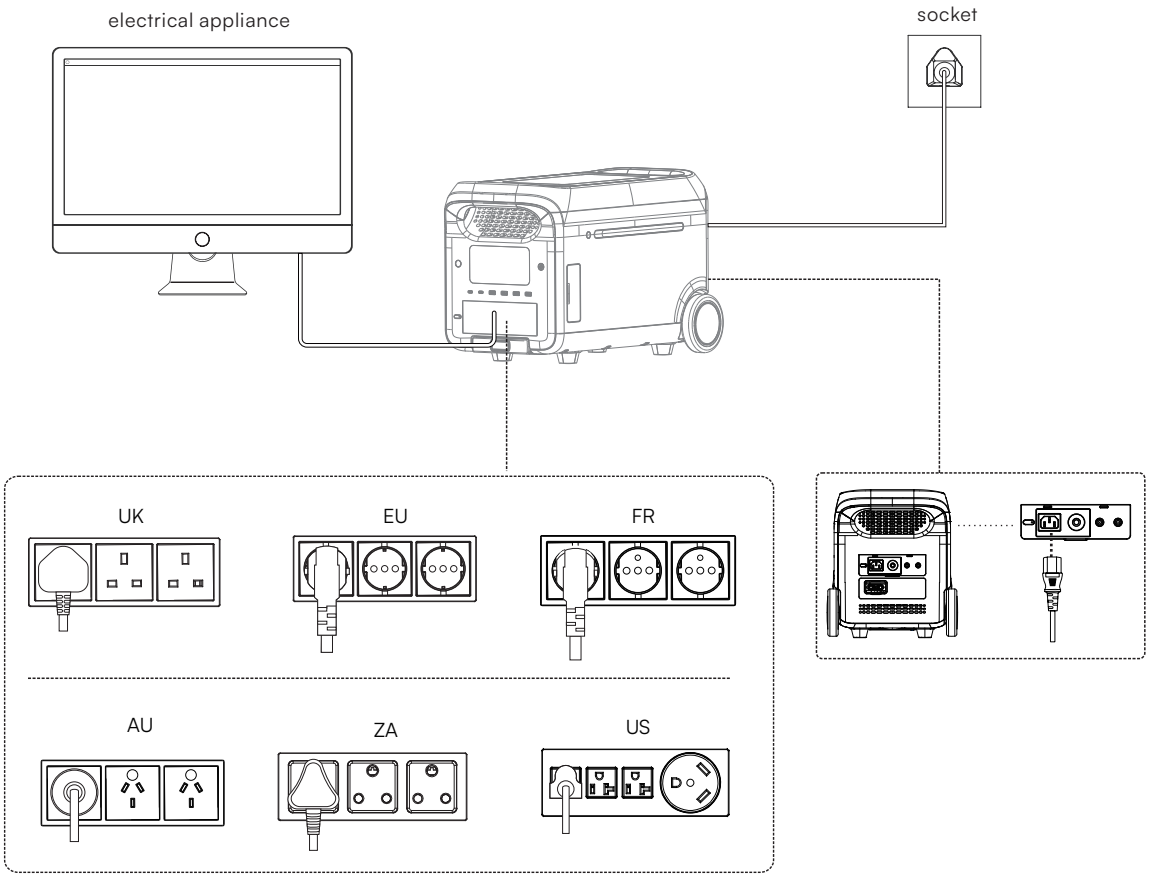

ANTI-SLIP GLOVES

Two anti-slip gloves are wrapped in the front and rear handles to prevent slipping.

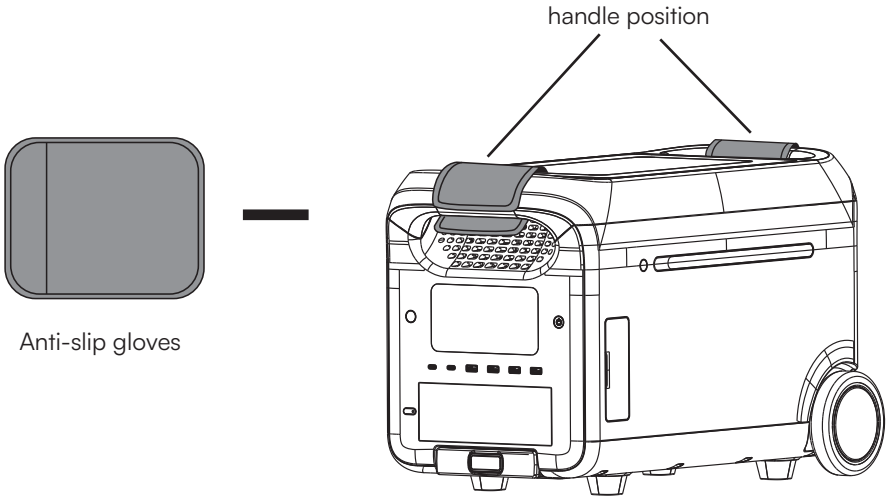

FAQS (FREQUENTLY ASKED QUESTIONS)

1. What kind of battery is used?
Lithium iron phosphate battery (LiFePO4).

2. What equipment can be connected to the AC output ports?
The AC output has high rating power and maximum power, which enables it to supply power to most household appliances. Suggest check the equipment power prior to connecting and make sure power of all equipment lower than rated power.

3. How to know the supply time?
Time shows in the LCD, which can be referred to for estimation for equipment with stable power co sumption.

4. How to know it is charging?
When in charge, the LCD shows remaining charging time. The SOC flickers, and input power is shown.

5. How to clean the unit?
Clean the unit with a dry, soft and clean cloth or tissue.

6. How to store the unit?
Turn it off, and keep it in a dry and ventilated place. Do not expose it close to water. For long-term storage, charge and discharge every 3 months, i.e. discharge to 0% then charge to 100%, and then discharge to 48%~52%.

7. Can it be taken on board?
No.

ERROR MESSAGES & SOLUTIONS

Icon		Fault Description	Solution
01 Error	Error code always on	Serious battery fault	Turn on and off, contact after sales if still not fixed.
02 Error	Error code always on	Battery cell voltage difference fault	Auto shutdown, fault will be cleared after reboot.
03 Error	Error code always on	BMS voltage fault	
Over 04 Error	High temperature icon always on Error code always on	Battery OTP (over temperature protection) fault	Auto shutdown, temperature recovery enables starting up.
Low 05 Error	Low temperature icon always on Error code always on	Battery UTP (under temperature protection) fault	
06 Error	Error code always on	Overcurrent/short circuit fault	Auto shutdown, fault will be cleared after reboot.
Over 07 Error	High temperature icon always on Error code always on	BMS board over temperature fault	Auto shutdown, delayed start.
08 Error	Error code always on	Pre-charge fault	Auto shutdown, fault will be cleared after reboot.
09 Error	Error code always on	Battery under voltage fault	Auto shutdown and charge, contact after sales if still not fixed after multiple charging failures.
10 Error	Error code always on	Abnormal parallelization	Check the connection cable. Contact after sales if still not fixed. Single power station function is not affected.
11 Error	Error code always on	Abnormal INV battery voltage	Auto recover after fault is cleared.
12 Error	Error code always on	Grid voltage or frequency fault	The fault is cleared when the grid returns to normal.
13 Error	Error code always on	Abnormal INV BUS voltage	Auto recover after fault is cleared.
14 Error	Error code always on	Abnormal INV output	
Overload 15 Error	Overload icon always on Error code always on	INV discharge overload	Remove over-power device. Auto recover after fault is cleared.
Overload 16 Error	Overload icon always on Error code always on	Charge overload	Auto recover after fault is cleared.
17 Error	Error code always on	INV Tz	
18 Error	Error code always on	INV input short	Fault will be cleared after reboot.
19 Error	Error code always on	INV output short	
Over 20 Error	High temperature icon always on Error code always on	MOSFET OTP fault	Auto recover after product is cooled down.

Icon		Fault Description	Solution
21 Error	Error code always on	Fan stop	Turn on and off, contact after sales if still not fixed.
22 Error	Error code always on	Discharge soft start fault	Auto recover after fault is cleared.
23 Error	Error code always on	Charge soft start fault	
Low 24 Error	Low temperature icon always on Error code always on	MOSFET UTP fault	Turn on and off, contact after sales if still not fixed.
25 Error	Error code always on	Anderson hardware OCP fault	Remove the Anderson charging port, auto recover after connecting Anderson and turn on.
26 Error	Error code always on	Anderson software OCP fault	Turn off output, manual recover after fault is cleared.
27 Error	Error code always on	DC input hardware overcurrent protection	Remove DC charge, auto recover after connecting DC and turn on.
28 Error	Error code always on	DC1 input software overcurrent protection	DC1 charging stops and will automatically resume after the fault is eliminated.
29 Error	Error code always on	DC2 input software overcurrent protection	DC2 charging stops and will automatically resume after the fault is eliminated.
30 Error	Error code always on	Car charger output/ DC5521 output Over current protection	Turn off output, manual recover after fault is cleared.
31 Error	Error code always on	PV output OVP (over voltage protection) fault	Stop PV. Auto recover after fault is cleared.
32 Error	Error code always on	DC1 input voltage overvoltage protection	Stop DC1. Auto recover after fault is cleared.
33 Error	Error code always on	DC2 input voltage overvoltage protection	Stop DC2. Auto recover after fault is cleared.
Over 34 Error	High temperature icon always on Error code always on	Anderson OTP fault	Turn off output, manual recover after fault is cleared.
Over 35 Error	High temperature icon always on Error code always on	DC1 input over temperature protection	Stop DC1. Auto recover after fault is cleared.
Over 36 Error	High temperature icon always on Error code always on	DC2 input over temperature protection	Stop DC2. Auto recover after fault is cleared.
Over 37 Error	High temperature icon always on Error code always on	Car charge output OTP fault	Turn off output, manual recover after fault is cleared.
38 Error	Error code always on	Abnormal communication	Turn on and off, or change operation environment. Contact after sales if still not fixed.
39 Error	Error code always on	Abnormal USB	Auto recover after removing abnormal USB.
40 Error	Error code always on	Abnormal type C	Auto recover after removing abnormal type C.
43 Error	Error code always on	The battery voltage is too low. The battery is broken	Contact after-sales processing.

If there is a warning occurs during the use of this product, and the warning icon still does not disappear after restarting the device, please stop using it immediately (do not try to charge or discharge).
If none of the above information can solve problem you encounter, please contact the customer service for consultation.

Note: DC1 refers to PV1 and Car Charger1. DC2 refers to PV2 and Car Charger2. Both PV and Car Charger are DC input sharing the same DC Ports.

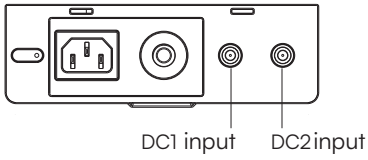

MAINTENANCE GUIDELINES

To ensure optimal performance and longevity of the power station, please adhere to the following maintenance recommendations:

- **Ambient Conditions**
  Store and operate the device within an ambient temperature range of 20°C to 30°C. Keep it away from water, heat sources, and metallic objects.
- **Long-Term Storage Protocol**
  Every three months, perform a full charge-discharge cycle:
  1. Discharge to 0%
  2. Charge to 100%
  3. Discharge to 48%—52% for storage
- **Temperature Limits**
  Do not store the device in environments exceeding 45°C or below —10°C, as this may compromise safety and battery integrity.
- **Low Capacity Precaution**
  If battery capacity falls below 1%, recharge to at least 60% before storage. Prolonged storage in a deeply discharged state may cause irreversible cell damage and reduce service life.
- **Deep Sleep Recovery**
  If the device remains idle with insufficient charge for an extended period, it may enter deep sleep mode. In such cases, recharge the device to resume normal operation.
- **Post-Charge/Discharge Handling**
  After charging or discharging, allow the device to rest for at least 30 minutes before use.

DISCLAIMER

This product is equipped with a built-in Battery Management System (BMS) that provides multiple layers of protection, including safeguards against overcharge, overdischarge, overcurrent, short circuit, high/low temperature, and abnormal communication. During operation, these protections may activate and temporarily interrupt output.

- The manufacturer is not liable for any indirect losses resulting from unexpected power interruptions, especially when the device is used to supply critical equipment such as medical devices or servers.
- Any damage or malfunction caused by unauthorized use, self-disassembly, or intentional misuse is outside the scope of the company's responsibility.

Before operating the power station, users must read and understand the user manual thoroughly. Retain the manual for future reference. Improper use may result in serious injury, equipment damage, or property loss. By using the product, users acknowledge and accept all terms and conditions outlined in the documentation and assume full responsibility for their actions and any resulting consequences.

The company reserves the final right of interpretation for this document and all related materials. Specifications and guidelines are subject to change, revision, or termination without prior notice. For the latest updates, please refer to the official website.

IMPORTANT NOTES

- This product contains battery type "Secondary" (rechargeable).
- Electrical and electronic equipment that has become waste is known as old equipment/device. Old devices must not be disposed of with other household waste.
- Owners of old devices at the end of its service life must return the device by taking them to the collection points set up by public waste disposal authorities or distributors. This return does not entail any costs for you.
- Owners of old devices have an obligation to remove accessible batteries / rechargeable batteries as well as non-destructively removable lamps from the old device prior to return. This does not apply if old devices are being prepared for reuse with the participation of a public law firm.
- Battery removal warning: The battery contained in this product must be removed only by professional personnel only. The battery must never be removed by the end user, if not removed correctly it could damage the battery which could cause fire.
- Batteries removed from an old electronic device should be disposed of separately. This return of battery does not entail any costs for you and the user is obliged to return the battery.
- Please make sure that this product is not powered on when removing the battery. Fire hazard! Avoid short-circuiting the contacts of a detached battery. Do not incinerate the battery. Please handle the battery with Caution!
- If electrical appliances or batteries are disposed of in landfills or dumps, hazardous substances can leak into the groundwater and get into the food chain, damaging your health and well-being.

- The symbol of "Crossed rubbish bins "indicates that this product should not be disposed of with other household wastes and must be collected separately from unsorted municipal waste at the end of its service life.
- Please use the link below to view the online directory of the collection and return points:https://www.ear-system.de/ear-verzeichnis/sammel-und-ruecknahmestellen

RoHS UK CA 22 PAP

V-TAC WEST EUROPE LTD. IN CASE OF ANY QUERY/ISSUE WITH THE PRODUCT, PLEASE REACH OUT TO US AT: SUPPORT@V-TAC.EU FOR MORE PRODUCTS RANGE, INQUIRY PLEASE CONTACT OUR DISTRIBUTOR OR NEAREST DEALERS. V-TAC WEST EUROPE LTD. GROUND FLOOR, 71 LOWER BAGGOT STREET, DUBLIN 02, IRELAND DO2 P593

V-TAC UK LTD. IN CASE OF ANY QUERY/ISSUE WITH THE PRODUCT PLEASE REACH OUT TO US AT SUPPORT@VTACEXPORTS.COM V-TAC, 5A TUNGSTEN PARK, DOWNS ROAD, WITNEY, OXFORDSHIRE, OX29 0AX

Meaningful Innovation.

APP OPERATION GUIDE

1800W POWER STATION

Smart Life App

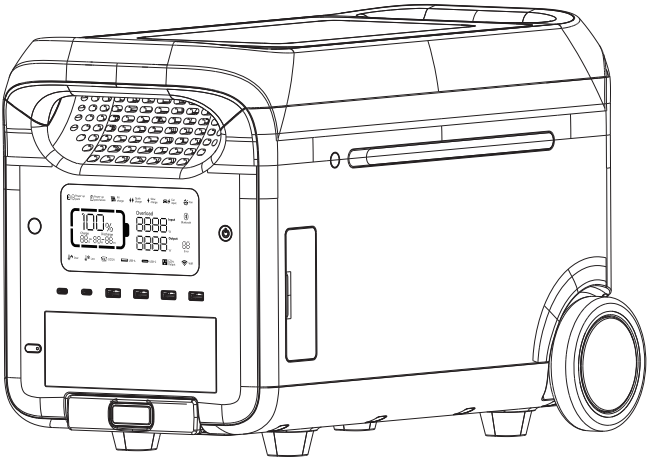

MODEL	VT-300011
SKU	12709

1. Install the application

Search for "Smart Life" in the APP store to download and install, or scan the QR code to download and install.

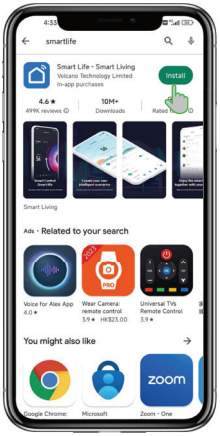

2. Device Pairing

Select Add Device in the APP main interface.

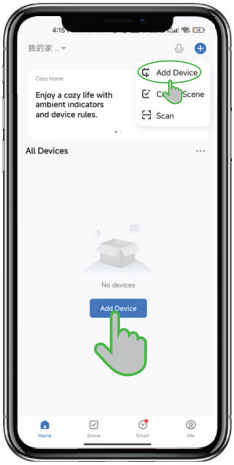

2.1 Enable Blutooth

Please follow the prompts to set Enable Nearby Devices permission and Enable Bluetooth so that you can easily add some Wi-Fi devices.

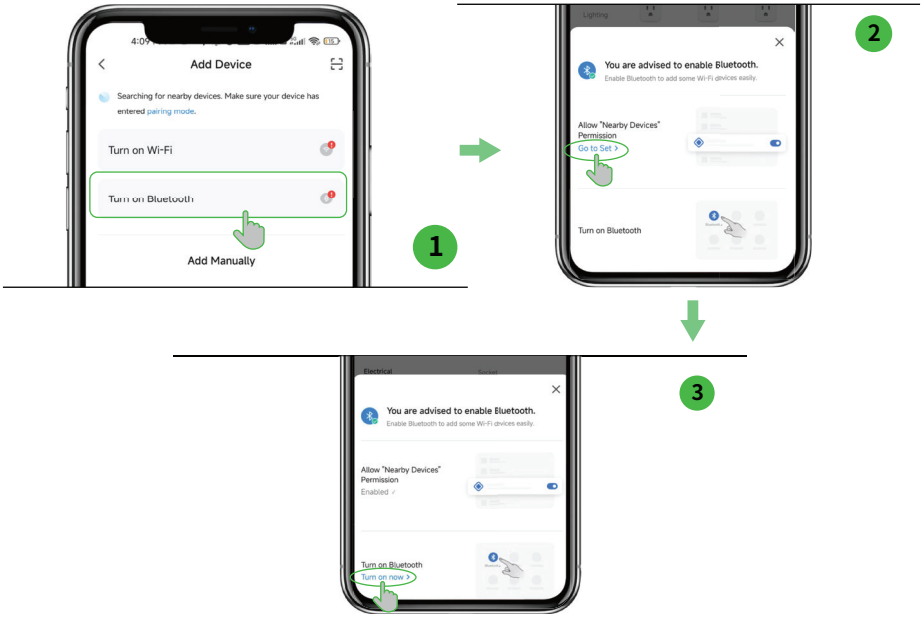

2.2 Device Connection to WiFi

The App main interface automatically pops up device information, or go to the [Add Device] interface, find the device and click [Add].
Please fill in the WiFi information to connect the device

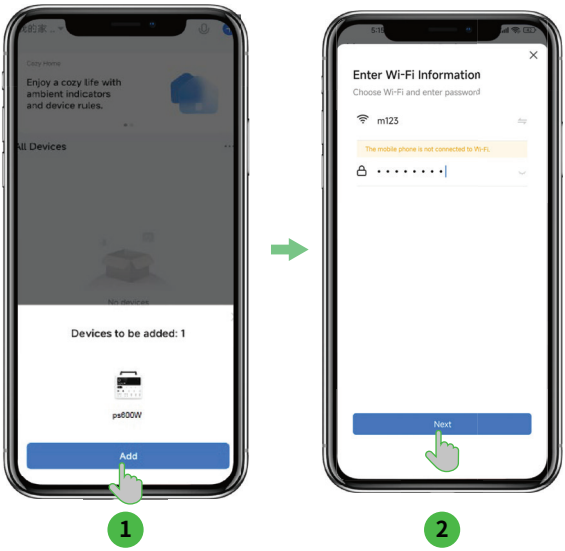

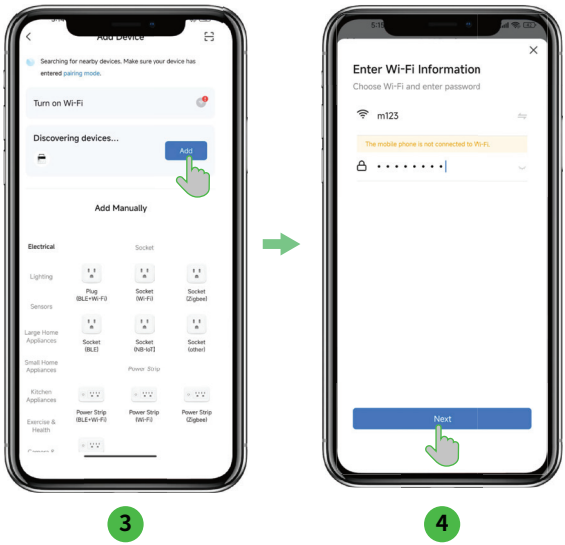

WiFi Connection Status

If the WIFI icon on the screen is always on, which means the connection is successful.

If you are not sure whether the machine has been paired by others, first cancel the possible WIFI pairing: press the two buttons as shown in the figure at the same time, and the WIFI icon flashes on the screen to indicate that the operation is successful.

Note: After the first successful WIFI connection, as long as the WIFI pairing is not canceled, you can use the APP to control the whole machine without connecting to the WIFI after only turning on the Bluetooth.

If there is no shared WIFI in your area, you can also use your cell phone to open a hotspot and connect your device to WIFI to complete the binding.

3. Parameter Set

3.1 View Device Information

After successful pairing you can find the device in the main interface.

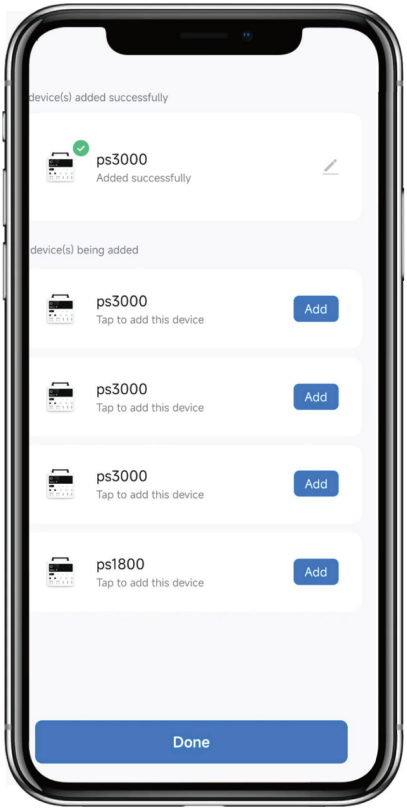

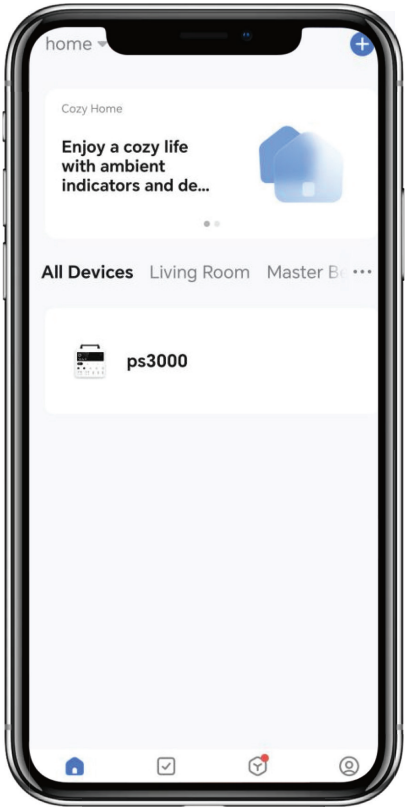

TAP THE BUTTON OF YOUR DEVICE TO ENTER THE BATTERY WORK SCREEN.

State of charge (SOC).

Battery temperature.

The current state of the batter. When charging, the estimated full charge time is displayed. When discharging, it shows the time for the remaining power to be consumed. In standby state, the standby time is displayed.

INPUT INDICATES THE TOTAL INPUT POWER

The power display in the state of using solar panels, respec - tively referring to PV power, total solar power generation, and reducing carbon dioxide emissions.

The power of charging the product by connecting the car cigarette lighter through the accessory.

The number of charging pack.

AC input power.

OUTPUT INDICATES THE TOTAL OUTPUT POWER

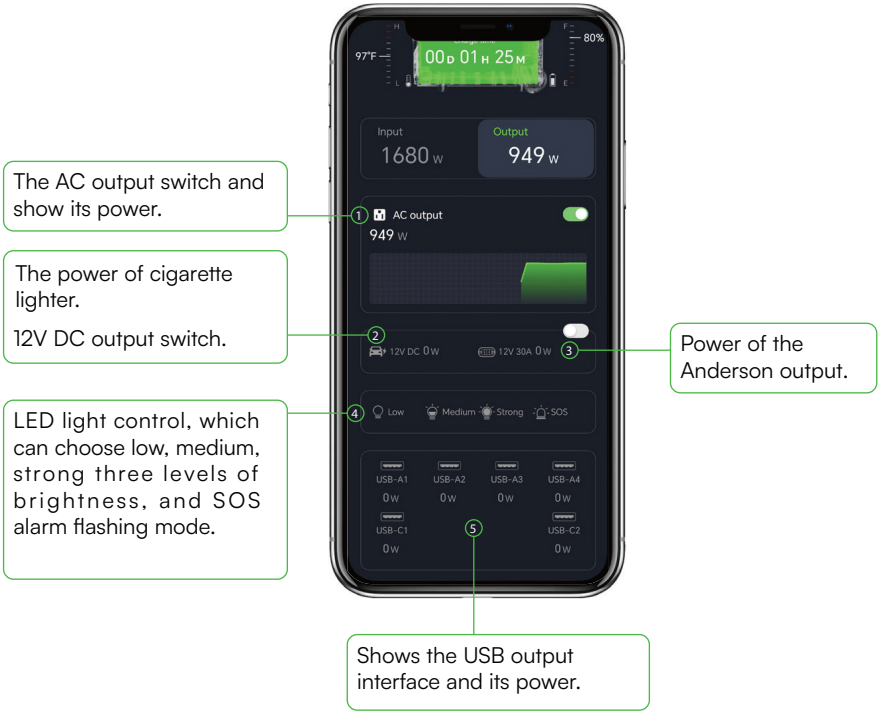

(Note：② and ③ are 12V DC output switch.)

SETTING DEVICE PARAMETERS

Click the upper right corner to enter the Settings interface.

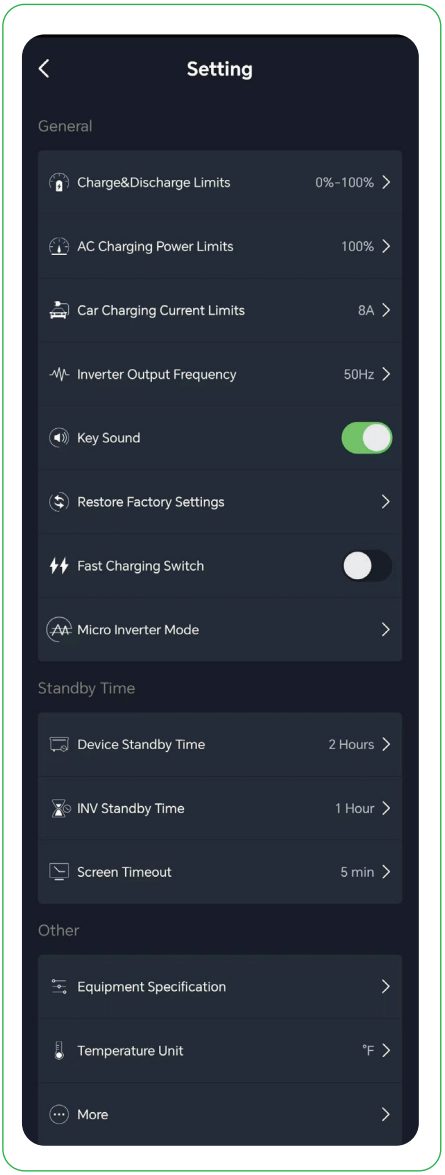

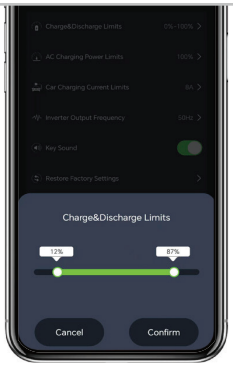

Charge & Discharge Limits

This is the charge & discharge limits, the factory default range is 0% to 100%. As shown in the figure, setting this range between 12% and 87% means that the state of charge (SOC) must be between 12% and 87%to charge and discharge properly.

1

AC Charging Power Limits

This is the AC charging power limits, the factory default value is 100%. As shown in the figure, if it is changed to 79%, the power of AC charging power limited to 79% of the maximum power.

2

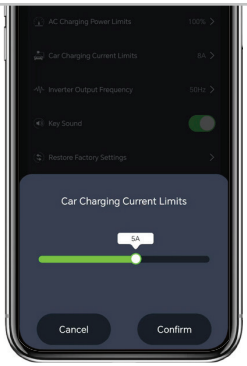

Car Charging Current Limits

This is the car charging current limits, the factory default value is 8A. You can adjust the charging current according to the vehicle.

3

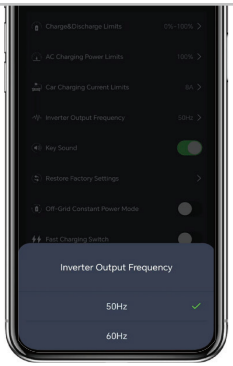

Inverter Output Frequency

This is the inverter output frequency, which provides two options of 50Hz and 60Hz.

4

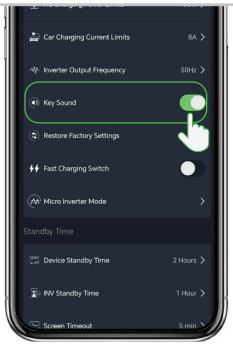

Key Sound

This is the key sound switch, when turned off to mute mode.

5

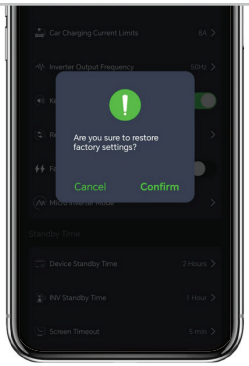

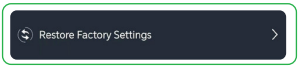

Restore Settings

This is restore settings, click [comfirm] , the device will be restored to the factory defaults.

6

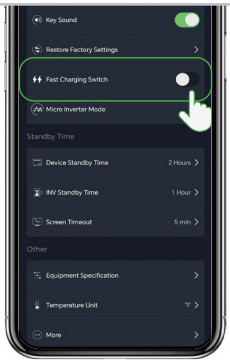

Fast Charging Switch

Fast charging switch refers to the switch of fast and slow charge mode of the mains. The switch is turned off by default. After it is turned on, the system enters the mains fast charge mode.

7

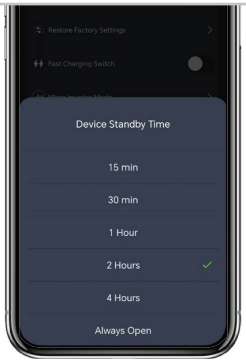

Device Standby Time

Device standby time refers to the countdown to turn off the device when the AC output switch is off and there is no charging and discharging. The factory default value is 2 hours.

8

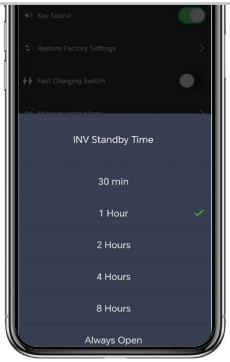

INV Standby Time

INV standby time refers to the AC output switch is turned on, there is no AC output, and it automatically shuts down when it reaches the set time. The factory default value is 1 hours.

9

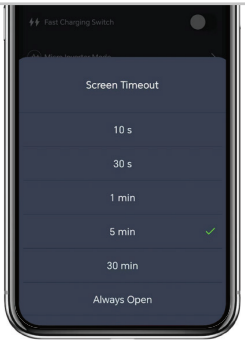

Screen Timeout

Screen timeout refers to the time when the screen automatically turns off after the touch screen operation is finished. The factory default value is 5 minutes.

10

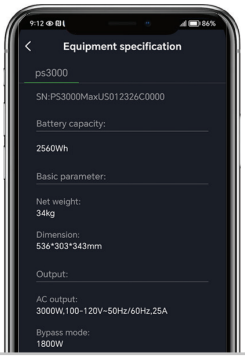

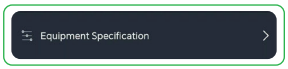

Equipment Specification

This is the equipment specification, you can view the device specification information here.

11

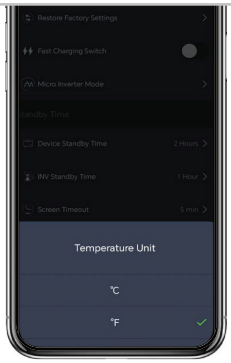

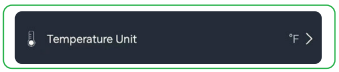

Temperature Unit

This is the battery temperature unit, you can choose Celsius or Fahrenheit.

12

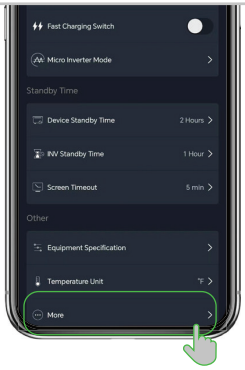

More

You can select "More" cases to view more features.

13

Select Device Information to get the virtual ID of the device, which can help better after-sales service.

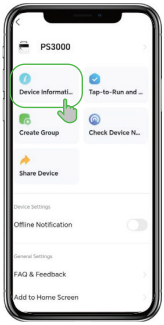

Note: Each Power Station has a different ID.